User's manual

XC77
XAC77

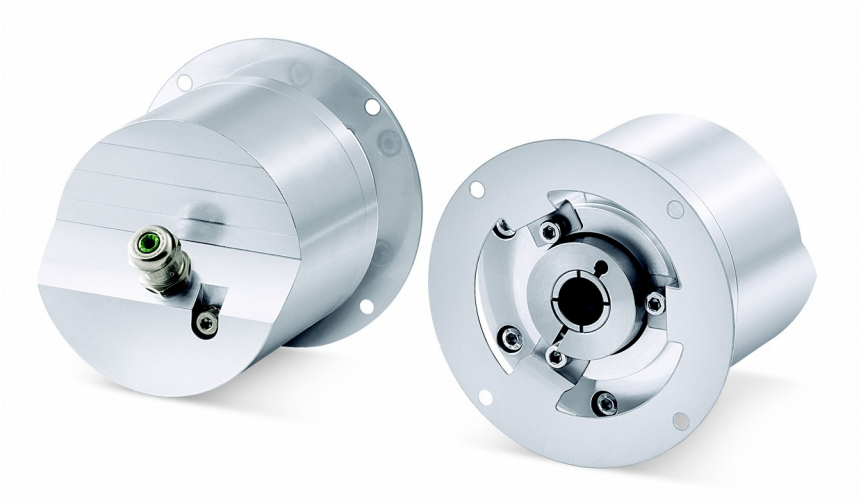

II2 GD, Ex d IIC T6 Gb, Ex tb IIIC T85°C Db, IP65
II2 GD, Ex d IIB T6 Gb, Ex tb IIIC T85°C Db, IP65

Table of Contents

1 - Safety summary

Safety

- Always comply with the information in this manual concerning the ATEX products;
- always adhere to the professional safety and accident prevention regulations applicable to your country during device installation and operation;
- installation and maintenance operations have to be carried out by qualified personnel only, with power supply disconnected and stationary mechanical parts;
- device must be used only for the purpose appropriate to its design: use for purposes other than those for which it has been designed could result in serious personal and/or the environment damage;
- high current, voltage and moving mechanical parts can cause serious or fatal injury;
- failure to comply with these precautions or with specific warnings elsewhere in this manual violates safety standards of design, manufacture, and intended use of the equipment;
- Lika Electronic assumes no liability for the customer's failure to comply with these requirements.

Electrical safety

- Turn off power supply before connecting the device;
- connect according to explanation in the "6 - Electrical connections" section;
- wires of output signals which are not used must be insulated singularly;
- absolute encoders: connect Zero setting and Counting Direction inputs to 0Vdc, if not used;
  - to zero set the encoder, connect Zero setting to +Vdc for 100 µs at least, then disconnect +Vdc; normally voltage must be at 0Vdc; zero set must be performed after Counting Direction; we suggest performing the zero set when the encoder is in stop;
  - Counting Direction: CW increasing count (viewed from shaft side) = connect to 0Vdc; CCW increasing count = connect to +Vdc;
- in compliance with the 2014/30/EU norm on electromagnetic compatibility, following precautions must be taken:

  - before handling and installing, discharge electrical charge from your body and tools which may come in touch with the device;
  - power supply must be stabilized without noise, install EMC filters on device power supply if needed;
  - always use shielded cables (twisted pair cables whenever possible);
  - avoid cables runs longer than necessary;
  - avoid running the signal cable near high voltage power cables;
  - mount the device as far as possible from any capacitive or inductive noise source, shield the device from noise source if needed;
  - to guarantee a correct working of the device, avoid using strong magnets on or near by the unit;
  - minimize noise by connecting the shield and/or the frame to ground. Make sure that ground is not affected by noise. The connection point to ground can be situated both on the device side and on the installation side. The best solution to minimize the interference must be carried out by the user.

Mechanical safety

- Install the device following strictly the information in the "7 – Mechanical characteristics" section;
- mechanical installation has to be carried out with stationary mechanical parts;
- do not disassemble the encoder;
- do not tool the encoder or its shaft;
- delicate electronic equipment: handle with care; do not subject the device and the shaft to knocks or shocks;
- respect the environmental characteristics declared by manufacturer;
- unit with hollow shaft: the encoder can be mounted directly on a shaft whose diameter has to meet the technical characteristics specified in the purchase order and clamped by means of the collar.

2 - Identification

Device can be identified through the **order code** and the **serial number** printed on the label applied to its body. Information is listed in the delivery document too. Please always quote the ordering code and the serial number when reaching Lika Electronic for purchasing spare parts or needing assistance. For any information on the technical characteristics of the product refer to the technical catalogue.

3 - ATEX certificate

CESI

CESI
Centro Elettrotecnico
Sperimentale Italiano
Giacinto Motta SpA

Via R. Rubattino 54
20134 Milano - Italia
Telefono +39 022125.1
Fax +39 0221255440
www.cesi.it

Capitale sociale 8 550 000 €
interamente versato
Codice fiscale e numero
iscrizione CCIAA 00793580150

Registro Imprese di Milano
Sezione Ordinaria
N. R.E.A. 429222
P.I. IT00793580150

CESI-ATEX

Schema di certificazione

Il CESI è stato autorizzato dal governo italiano ad operare quale organismo di certificazione di apparecchi e sistemi destinati a essere utilizzati in atmosfera potenzialmente esplosiva con D.M. 1/3/1983, D.M. 19/6/1990, D.M. 20/7/1998, D.M. 27/9/2000 e D.M. 02/02/2006

ATEX E C-02 - 1

CERTIFICATE

[1] **EC-TYPE EXAMINATION CERTIFICATE**

[2] **Equipment or Protective System intended for use in potentially explosive atmospheres Directive 94/9/EC**

[3] EC-Type Examination Certificate number:

CESI 08 ATEX 013

[4] Equipment: **Incremental Encoder series XC77** and **Absolute Encoder series XAC77**

[5] Manufacturer: **Lika Electronic s.n.c.**

[6] Address: **Via S. Lorenzo 25, 36010 Carrè (Vi) - Italy**

[7] This equipment or protective system and any acceptable variation thereto is specified in the schedule to this certificate and the documents therein referred to.

[8] CESI, notified body n. 0722 in accordance with Article 9 of the Council Directive 94/9/EC of 23 March 1994, certifies that this equipment or protective system has been found to comply with the Essential Health and Safety Requirements relating to the design and construction of equipment and protective systems intended for use in potentially explosive atmospheres given in Annex II to the Directive.

The examination and test results are recorded in confidential report n. A8008869

[9] Compliance with the Essential Health and Safety Requirements has been assured by compliance with:

EN 60079-0 :2004 EN 60079-1:2007 EN 61241-0 :2006 EN 61241-1 :2004

[10] If the sign "X" is placed after the certificate number, it indicates that the equipment or protective system is subject to special conditions for safe use specified in the schedule to this certificate.

[11] This EC-TYPE EXAMINATION CERTIFICATE relates only to the design, examination and tests of the specified equipment or protective system in accordance to the Directive 94/9/EC. Further requirements of the Directive apply to the manufacturing process and supply of this equipment or protective system. These are not covered by this certificate.

[12] The marking of the equipment or protective system shall include the following:

II 2GD Ex d IIC T6, Ex tD A21 IP65 T 85°C

This certificate may only be reproduced in its entirety and without any change, schedule included.

Date 28.04.2008 - **Translation issued the** 28.04.2008

Prepared	Verified	Approved
Gaetano Baldini	Mirko Balaz	Fiorenzo Bregani

CESI S.p.A.
Energy Division
"Certification Technical Department"
The Manager

Page 1/3

CESI

[13] **Schedule**

[14] **EC-TYPE EXAMINATION CERTIFICATE n. CESI 08 ATEX 013**

[15] **Description of equipment**

The encoder is a rotating transducer that converts an angular position of the shaft into a digital electric signal. This electro-mechanical equipment is able to detect angular displacements and to estimate rotating speeds and accelerations by dedicated electronic and/or mechanical interfaces. The translation from mechanical motion to digital signal is obtained by photo-electric reading from an infrared led joined to a light beam collimator: emitted light hits a glass disk supplied by dark and transparent marks; escaped light rays are then gathered by a phototransistor set. The obtained signal are digitalized by a comparator device.

XC77 Incremental Encoder

Position is determined by counting pulses relative to the zero track.

XAC77 Absolute Encoder

Position is evaluated by reading output code, that is unique for every shaft position. Such devices keep then effective position data in the case of power fail and they not need the zero mark search when restart is carried out, as incremental encoder has to search.

Bulk and flange of both the encoders are made of anticorodal (EN AW-6082 aluminium alloy), while shaft and ring nut are made of 1.4305 stainless steel. The flange is screwed to the bulk.

The identification mark of the encoders is detailed in the descriptive documents here enclosed.

Electrical and mechanical characteristics

XC77 Encoder

Supply voltage:	5 V dc, 5 Vdc -30 Vdc, 10 Vdc -30 Vdc
No load maximum current:	70 mA
Maximum output current for every channel	40 mA
Output:	NPN, Push-Pull, Line Driver, PP/LD

XAC77 Encoder

Supply voltage:	10Vdc - 30 Vdc
No load max current:	150 mA
Max output current for every channel	40 mA
Output/Code	NPN, Push-Pull, SSI / Binario, Gray

Max rotation speed:	6000 rpm
Electrical protection:	Polarity inversion and short circuit.
Max shaft load:	60 N (axial and radial)
Degree of protection:	IP65 (EN 60529:1997)
Temperature class:	T6
Max surface temperature:	T 85 °C
Ambient temperature:	-20 °C ≤ Ta ≤ +40 °C

Cables entries

The accessories used for cable entries and for unused holes shall be subject of separate certification: in the unit of category II 2GD shall be certified according to the Standards: EN 60079-0, EN 60079-1 and EN 61241-1 and shall guarantee a degree of protection IP65 according to EN 60529 Standard.

This certificate may only be reproduced in its entirety and without any change, schedule included.

Page 2/3

Prot. A8008876 P: 3 + 26

CESI

[13] **Schedule**

[14] **EC-TYPE EXAMINATION CERTIFICATE n. CESI 08 ATEX 013**

[16] **Report n.** A8008869

Routine tests

Manufacturer shall carry out the routine tests and checkouts prescribed at paragraph 27 of the EN 60079-0 and at paragraph 24 of the EN 61241-0 Standards. Manufacturer is not charged of overpressure test because the equipments have passed the overpressure test carried out by the static method using four times the reference pressure (28 bar).

Descriptive documents (prot. A8008877)

- Encoder Technical File series XC77 - XAC77		2 sheets	19/03/2008
- Absolute Encoder series XAC77 – ROTACOD Description		2 sheets	
- LKM 1362 XA77 Bulk – Radial	rev. 3	1 sheet	26/07/2007
- LKM 1367 XA77 Bulk – Axial	rev. 3	1 sheet	26/07/2007
- Incremental Encoder XC77 – ROTAPLUS Description		2 sheets	
- LKM 1368 XC77 Bulk	rev. 3	1 sheet	25/07/2007
- Sez. 4300 XC77 + XAC77 (radial and axial cable) Hollow shaft Φ14	rev. 3	3 sheets	26/07/2007
- LKM 1363 XC77 and XAC77 Empty Axis	rev. 3	1 sheet	26/07/2007
- LKM 1361 XC77 e XAC77 Flange	rev. 3	1 sheet	25/07/2007
- LKM 1481 XC77 e XAC77 Ring nut	rev. 1	1 sheet	14/02/2006
- LKM 1364 XC77 e XAC77 Blocked Axis Ring nut	rev. 2	1 sheet	14/02/2006
- Technical data sheet FKM		1 sheet	19/05/2006
- Technical data sheet FKM 75.16-01 O-ring		2 sheets	25/10/2005
- LKM 1551 XC77-XAC77 Plate	rev. 3	1 sheet	28/04/2008
- Technical data sheet metalized polyester label (Brady)		3 sheets	
- XC77 e XAC77 Safety Instructions		2 sheets	19/03/2008
- CE Conformity Declaration	N. 4	1 sheet	19/03/2008

One copy of all documents is kept in CESI files.

[17] **Special conditions for safe use**

None.

[18] **Essential Health and Safety Requirements**

Guaranteed by the compliance to the mentioned Standards.

This certificate may only be reproduced in its entirety and without any change, schedule included.

Page 3/3

CESI

ISMES
IPH BERLIN
FGH

EXTENSION n. 01/15

to Type Examination Certificate CESI 08 ATEX 013

Equipment: Incremental encoder series XC77 and absolute encoder series XAC77

Manufacturer: Lika Electronic Srl

Address: Via San Lorenzo, 25
36010 Carrè (VI)
Italy

Admitted variation

- *Changing of the company name:*

from:	**Lika Electronic Snc**	*to:*	**Lika Electronic Srl**

- *Updating to the following reference standards:*
  EN 60079-0: 2012+A11:2013,
  EN 60079-1: 2007,
  EN 60079-31: 2009.

- *Addition of the possibility to mark for* gas group IIB.

- *Constructive changes:*
  Addition of the possibility of using stainless steel enclosures,
  Addition of the possibility of having absolute encoders with reduced length enclosures,
  Addition of external mounting kits and other small changes not influencing the type of protection.

- *Updating of the ATEX marking on the plate:*

  II 2G Ex d IIC T6 Gb
  Or
  II 2G Ex d IIB T6 Gb

  II 2D Ex tb IIIC T85°C Db

This extension and annexed descriptive documents must be annexed to the Type Examination Certificate CESI 08 ATEX 013.

This document may only be reproduced in its entirety and without any change.

Date 1/04/2015 - translation issued on 1st April 2015

Prepared	**Verified**	**Approved**
Tiziano COLA	Mirko BALAŽ	Roberto PICCIN

CESI S.p.A.
Testing & Certification Division

Page 1/3

EST-CE-ING-0

ACCREDIA L'ENTE ITALIANO DI ACCREDITAMENTO
PRD N. 018B
Membro degli Accordi di Mutuo Riconoscimento EA, IAF e ILAC
Signatory of EA, IAF and ILAC Mutual Recognition Agreements

CESI S.p.A.
Via Rubattino 54
I-20134 Milano - Italy
Tel: +39 02 21251
Fax: +39 02 21255440
e-mail: info@cesi.it
www.cesi.it

Capitale sociale € 8.550.000 interamente versato
C.F. e numero iscrizione Reg. Imprese di Milano 00793580150
P.I. IT00793580150
N. R.E.A. 429222

CESI

EXTENSION n. 01/15

to Type Examination Certificate CESI 08 ATEX 013

Description of equipment

With this extension it is added the possibility of making the enclosure in stainless steel besides aluminium which was foreseen in the original certificate. The apparatus, without any constructive variation, can be marked IIB in order to simplify the selection of the cable gland. It is also added the possibility, as shown in the annexed documents, of making the enclosures of the absolute encoders a little shorter than in the original certificate.
The possibility, added with this extension, of supplying together with the encoder two mounting kits, does not affect the adopted type of protection.

The equipment mounting stainless steel enclosures are identified by a code ("S613") which is appended at the end of the apparatus encoding:

XC77 *dddd*	Incremental encoder having an aluminium enclosure
XC77 *dddd* **/S613**	Incremental encoder having a stainless steel enclosure
XAC77 *dddd*	Absolute encoder having an aluminium enclosure
XAC77 *dddd* **/S613**	Absolute encoder having a stainless steel enclosure

The fields identified by the characters "dddd" locate the part of the code containing information useful for the type of application but irrelevant for the protection of the apparatus.

Electrical characteristics

Electrical data are unchanged respect to the original certificate. According to the new reference standards the marking to be put on the plate has been modified:

ATEX marking:	II 2GD		
Marking for the gas protection:	Ex d IIC T6 Gb	or	Ex d IIB T6 Gb
Marking for the combustible dusts:	Ex tb IIIC T85°C Db		

Cable entries

Accessories used for the cables entry shall be subject of independent certification according to the standard EN 60079-0, EN 60079-1 and EN 60079-31 and guarantee a minimum protection level IP65 according to the standard EN 60529. For the selection of the cable gland follow the prescription of the standard EN 60079-14 and keep into account the marking of the encoder (gas group IIB or IIC).

Warning labels

None.

Report n. EX-B5006802

Routine tests

The manufacturer is exempted from carrying out the routine overpressure tests on the enclosures as they have overcome the type tests carried out with the static method at 28 bar, equal to 4 times the reference pressure.

CESI

EXTENSION n. 01/15

to Type Examination Certificate CESI 08 ATEX 013

Descriptive documents (prot. EX-B5006808)

Technical note encoder series XC77-XAC77 (2 pages)	dated	2015/03/30
Safety instructions encoder series XC77-XAC77 (2 pages)	dated	2015/03/30
Drawing n. KIT_LKM1520 rev. A (mounting kit 1: flange)	dated	2014/12/15
Drawing n. KIT_LKM-1758 rev. A (mounting kit 2: shaft)	dated	2014/12/15
Drawing n. LKM_001363 rev. A	dated	2014/12/01
Drawing n. LKM_001363_MO rev. A	dated	2014/12/02
Drawing plate n. LKM_1551 rev. 5	dated	2015/03/30
Drawing n. SEZ_4300 rev. A (3 pages)	dated	2014/03/03
Drawing n. PF_4300 rev. A	dated	2014/12/10
Drawing n. PF_4301 rev. A	dated	2014/12/10
Drawing n. PF_4302 rev. A	dated	2014/12/10
Data sheet ROTACOD absolute encoder XAC77 (3 pages)		
Data sheet ROTAPULS incremental encoder XC77 (2 pages)		
Data sheets shaft sealing ring (9 pages)		
Facsimile EC declaration of conformity		

One copy of all the descriptive documents mentioned above is kept in CESI files.

Special conditions for safe use

None.

Essential Health and Safety Requirements

Essential health and safety requirements are covered by compliance to the following standards:

- EN 60079-0: 2012 + A11: 2013 Explosive atmospheres
  Part 0: Equipment - General requirements;
- EN 60079-1 : 2007 Explosive atmospheres
  Part 1: Equipment protection by flameproof enclosures "d";
- EN 60079-31 : 2009 Explosive atmospheres
  Part 31: Equipment dust ignition protection by enclosure "t".

CESI

NOTIFICATION

CESI S.p.A.
Via Rubattino 54
I-20134 Milano - Italy
Tel: +39 02 21251
Fax: +39 02 21255440
e-mail: info@cesi.it
www.cesi.it

CESI-ATEX

Schema di certificazione

ACCREDIA
PRD N. 018B
Membro degli Accordi di Mutuo Riconoscimento EA, IAF e ILAC
Signatory of EA, IAF and ILAC Mutual Recognition Agreements

[1] **PRODUCT QUALITY ASSURANCE NOTIFICATION**

[2] **Equipment or Protective System or Component intended for use in potentially explosive atmospheres Directive 94/9/EC**

[3] Notification number:

CESI 16 ATEX 005 Q

[4] Equipment or component type: Shaft encoders

Protection concepts: Flameproof enclosures "d"
Dust ignition protection "t"

[5] Applicant: LIKA Electronic s.r.l.
via San Lorenzo n° 25
36010 Carrè - VI

[6] Manufacturer: LIKA Electronic s.r.l.
via San Lorenzo n° 25
36010 Carrè - VI

[7] CESI, notified body n. 0722 in accordance with Article 9 of the Council Directive 94/9/EC of 23 March 1994, notifies to the applicant that the actual manufacturer has a production quality system which complies to Annex VII of the Directive.

[8] This notification is based on audit report n. EX-B6003584 issued the 17/02/2016.

This notification can be withdrawn if the manufacturer no longer satisfies the requirement of Annex VII.

Results of periodical re-assessment of the quality system are a part of this notification.

[9] This notification is **valid until 17/02/2019** and can be withdrawn if the Manufacturer does not satisfy the product quality assurance re-assessment.

[10] According to Article 10 [1] of the Directive 94/9/EC the CE marking shall be followed by the identification n. 0722 identifying the notified body involved in the production control stage.

This notification may only be reproduced in its entirety and without any change.

Date 17th February 2016 - Translation issued 17th February 2016

Prepared	Verified	Approved
Tiziano Cola	Mirko Balaž	Roberto Piccin

CESI S.p.A.
Testing & Certification Division
Business Area Certification
Il Responsabile
(Roberto Piccin)

Page 1/1

Prot. B6003588 P: 1

4 – EU Declaration of Conformity

Lika Electronic Srl
Via S. Lorenzo, 25
36010 Carrè (VI) • Italy

Smart encoders & actuators

EU Declaration of Conformity encoders series XC77-XAC77

1) Certificate: Nr. 4

2) Manufacturer: LIKA ELECTRONIC SRL
Via S. Lorenzo, 25
36010 Carrè (VI) – Italy
VAT# IT00817760242

3) Scope of the certificate: incremental encoder series **XC77**
absolute encoder series **XAC77**

4) This certificate has been issued under the responsibility of the manufacturer indicated in point 2).

5) The scope of the certificate indicated in point 3) is in conformity with the essential Health and Safety regulations and legislative regulations of the directives:
2014/34/EU "ATEX"
2014/30/EU "Electromagnetic compatibility"

6) Compliance to harmonized regulations, technical specifications and other documents is assured by compliance to the directives indicated at point 5:
EN 60079-0:2012 + A11:2013
EN 60079-1: 2007-07
EN 60079-31: 2009
EN 61000-6-4, EN 61000-6-2

7) The notified body CESI has performed the CE examination and issued the following certificate:
CESI 08 ATEX 013

8) ATEX marking on the equipment:

Ex **II2 GD, Ex d IIC T6 Gb, Ex tb IIIC T 85°C Db, IP65**

or

Ex **II2 GD, Ex d IIB T6 Gb, Ex tb IIIC T 85°C Db, IP65**

9) Notified body Nr. **0722**, Notification **CESI 16 ATEX 005 Q.**

Carrè, 06.10.2016

Giampaolo CALABRESE
Legal representative

Lika Electronic Srl
Smart encoders & actuators

30 YEARS YOUNG 1982.2012

Headquarters & Plant
Via S. Lorenzo, 25
36010 Carrè (VI) • Italy

Tel. +39 0445 806600
Fax +39 0445 806699
info@lika.biz • www.lika.biz

P.I./C.F. IT 00817760242
VAT # IT 00817760242
R.E.A. 165423/Vicenza

5 – Safety instructions

Lika Electronic Srl
Via S. Lorenzo, 25
36010 Carrè (VI) • Italy

Smart encoders & actuators

SAFETY INSTRUCTIONS encoders series XC77-XAC77

1) Marking:

II2 GD, Ex d IIC T6 Gb, Ex tb IIIC T 85°C Db, IP65

oppure

II2 GD, Ex d IIB T6 Gb, Ex tb IIIC T 85°C Db, IP65

Nr. of certificate: **CESI 08 ATEX 013**

Explosion-proof encoder manufactured according to the following regulations:
EN 60079-0: 2012-08 / EN 60079-1: 2007-07
EN 60079-31: 2009
EN 61000-6-4 / EN 61000-6-2

- **II:** Equipment intended for use in potentially explosive atmospheres other than mines
- **2 GD:** Category 2 equipment with high level protection for use in areas in which explosive atmospheres caused by gases, vapours, mists or air/dust mixtures are likely to occur.
- **Ex:** Equipment for use in potentially explosive atmospheres
- **d:** Protection by explosion-proof housing
- **IIB-IIC:** Electrical apparatus for use in potentially explosive atmospheres caused by gasses of the group IIB (e.g. C_2H_4) or group IIC (e.g. H_2, C_2H_2).
- **T6:** Temperature class for gasses T6 = 85°C
- **Gb:** Level of protection (EPL). The equipment can be used in Zone 1 and 2.
- **tb:** Electrical apparatus with protective housing for use in the presence of combustible dust.
- **IIIC:** Equipment or protective housing intended for use in potentially explosive atmospheres with presence of combustible (including conductive dust).
- **T 85°C:** Maximum surface temperature.
- **Db:** Level of protection (EPL). The equipment can be used in Zone 21 and 22.
- **IP65:** Degree of IP protection for dust-proof housing.

Equipment intended for use in the following Zones:
Zone 1, Zone 2: Mixture of gas/air, vapour/air, mist/air,
Zone 21, Zone 22: Mixture of dust/air

ATTENTION: Equipment not to be used in Zone 0

Lika Electronic Srl
Smart encoders & actuators

30 YEARS YOUNG 1982.2012

Headquarters & Plant
Via S. Lorenzo, 25
36010 Carrè (VI) • Italy

Tel. +39 0445 806600
Fax +39 0445 806699
info@lika.biz • www.lika.biz

P.I./C.F. IT 00817760242
VAT # IT 00817760242
R.E.A. 165423/Vicenza

Lika Electronic Srl
Via S. Lorenzo, 25
36010 Carrè (VI) • Italy

Smart encoders & actuators

2) The equipment has to be installed only by qualified personnel and according to the applicable regulations.
3) Do not tool or drill the equipment.
4) Do not open the equipment.
5) Do not loosen or unscrew the cable-press.
6) Use the encoder's fixing plate for installation and against rotation.
7) Protect the device against shock and mechanical damages.
8) Use the product according to the indicated degree of IP protection.
9) Maximum permissible environmental temperature -20°C to +40°C (at continuous rot. speed of max. 6000 rpm).
10) In classified areas the electrical connection of the device has to be carried out according to the methods of EN 60079-0 and according to EN 60079-14.
11) Connect the device according to the electrical connections scheme on the user manual.
12) Provide a ground connection (GND) using the ground screw on the housing.

LIKA ELECTRONIC SRL
Carre', 30.03.2015

Lika Electronic Srl
Smart encoders & actuators

30 YEARS YOUNG 1982.2012

Headquarters & Plant
Via S. Lorenzo, 25
36010 Carrè (VI) • Italy

Tel. +39 0445 806600
Fax +39 0445 806699
info@lika.biz • www.lika.biz

P.I./C.F. IT 00817760242
VAT # IT 00817760242
R.E.A. 165423/Vicenza

6 - Electrical connections

WARNING
Turn off the power supply before connecting the device.

WARNING
If wires of unused signals come in contact, irreparable damage could be caused to the device. Please insulate them singularly.

Minimize noise by connecting the shield and/or the frame to ground. Make sure that ground is not affected by noise. The connection point to ground can be situated both on the device side and on the installation side. The best solution to minimize the interference must be carried out by the user.

6.1 Minimum cable length

XC77-... and XAC77-... devices are provided with a cable having a minimum length of 3 m in order to meet the gas protection requirements and thus bear the ATEX marking: **II2 GD Ex d IIC T6 Gb**. Do not shorten the cable! If this happens, the gas protection level cannot be reached and the ATEX marking has to be intended as follows: **II2 GD Ex d IIB T6 Gb** (lower gas protection level).

6.2 XC77-...-ZCU...

Function	8-wire I8 type cable
A	Yellow
/A	Blue
B	Green
/B	Orange
0	White
/0	Grey
+Vdc	Red
0Vdc power supply	Black
Shielding	Shield

6.3 XAC77 with SSI interface

Function	8-wire A8 type cable
Clock +	White
Clock -	Brown
Data +	Green
Data -	Yellow
Zero setting	Pink
Counting Direction	Blue
+10Vdc +30Vdc	Red
0Vdc power supply	Black
Shielding	Shield

6.4 XAC77 with bit parallel output (NPN o.c. / Push-Pull)

Function	16-wire A16 cable	19-wire A19 cable	32-wire A32 cable
1 LSB	Brown	Brown	Brown
2	Red	Red	Red
3	Pink	Pink	Pink
4	Yellow	Yellow	Yellow
5	Green	Green	Green
6	Blue	Blue	Blue
7	Violet	Violet	Violet
8	Grey	Grey	Grey
9	White	White	White
10	Black	Black	Black
11	White/Green	White/Green	Brown/Red
12	Brown/Green	Brown/Green	White/Red
13	-	Red/Blue	Red/Blue
14	-	Grey/Brown	Grey/Pink
15	-	White/Grey	White/Yellow
16	-	-	Brown/Green
17	-	-	White/Green
18	-	-	Yellow/Brown
19	-	-	White/Blue
20	-	-	Brown/Blue
21	-	-	White/Pink
22	-	-	White/Grey
23	-	-	Pink/Brown
24	-	-	Grey/Brown
25	-	-	Brown/Black
Zero setting	Red/Blue	White/Pink	Grey/Green
Counting Direction	Grey/Pink	Grey/Pink	Yellow/Pink
+10Vdc +30Vdc	White/Yellow	White/Yellow	Green/Blue
0Vdc power supply	Yellow/Brown	Yellow/Brown	Yellow/Blue
Shielding	Shield	Shield	Shield

6.5 XAC77 with Profibus-DP interface (XAC77xx/xxxxxPB-...)

ATEX encoders with Profibus interface are based on the Hx58 FB series encoders, thus refer to the transmission specifications described in the Hx58 FB Profibus manual; differences, if any, are described below. Furthermore they need the **HS58_Vx.gsd** (singleturn) or **HM58_Vx.gsd** (multiturn) GSD file. User's manual and GSD file are available at the address: **www.lika.biz > PRODUCTS > ROTARY ENCODERS > ABSOLUTE ENCODERS > PROFIBUS > Hx58 FB**).

Function	Wires
+10Vdc +30Vdc Supply voltage	Red
0Vdc Supply voltage	White
Profibus B (bus input)	Blue
Profibus A (bus input)	White
Profibus B (bus output)	Green
Profibus A (bus output)	White
+5Vdc out for RT[1]	Yellow
0Vdc out for RT[1]	White
Profibus Shielding	Shield
1 Both wires are supplied with a heat-shrink tubing protection; ensure it is always applied over them if the bus termination resistor is not provided (Danger! Irreparable damages!).	

WARNING

- The node address must be set via software by the bus Master using the SAP55 service, for further information refer to the "6.5.1 Setting the node address via BUS (SAP55 service)" section on page 43. Node address = 125 is set by Lika Electronic by default; to set a different address you must connect to the network one encoder at a time and then set the node ID, otherwise an address conflict will occur. With /AABT order code (see datasheet), AA address cannot be modified (except AA = 7Eh).
- Baud rate is set automatically by the bus Master.
- Do not open the device for any setting!
- The diagnostic LEDs are not available for this model.
- Provided cable is not a Profibus certified cable, anyway it is fitted with bus input and output to avoid installing stubs on the Profibus network.
- If the encoder is either the first or the last in the transmission line (at the ends of the network), a certified bus active termination resistor must be installed; otherwise the following connection must be provided at outputs. With /AABT order code (see datasheet), if T = 1, the termination resistor is installed and active and cannot be deactivated (do not install external resistors!).

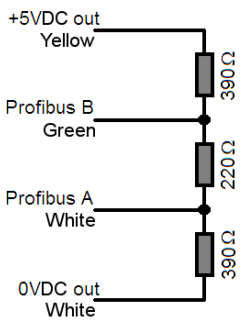

- To avoid irreparable damages to the encoder wires which are not used must be cut at different lengths and insulated singularly.

6.5.1 Setting the node address via BUS (SAP55 service)

WARNING
SAP55 service can only be accomplished by a **Class 2 DP Master (DPM2)**. Class 1 Masters (DPM1) cannot accomplish the SAP55 service.
With /AABT order code (see datasheet), AA address cannot be modified (except AA = 7Eh).

Lika encoders of the XAC77 series are designed to allow the slave address setting via a bus command by means of the SAP55 service.
The Service Access Point SAP55 Set_Slave_Address allows to change the address stored in the internal memory of a slave device. SAP55 service is part of the Profibus specifications and allows to change the internal memory address in the event that the device does not provide switches for setting its address or they are not usable. The internal memory address stored at factory by Lika Electronic is "125".

Setting the node address via Siemens STEP7

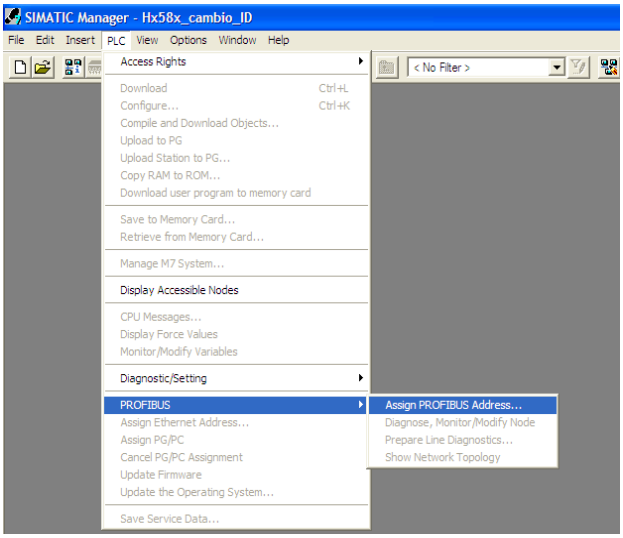

To change the node address stored in the internal memory, open the **SIMATIC Manager** window and press the **Assign PROFIBUS Address...** command in the **PLC\PROFIBUS** menu. The **Assign PROFIBUS Address** window will appear on the screen.

In the **Assign PROFIBUS Address** window select the node address currently stored in the internal memory (factory setting = 125) in the **Current PROFIBUS Address** combo box and then select the new address you want to set in the **New PROFIBUS Address** combo box (for instance: "6"). Press the **Apply** button and then the **OK** button to confirm.

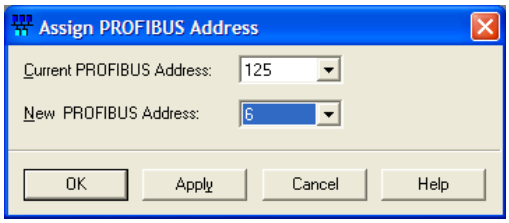

6.6 XAC77 with CANopen interface (XAC77xx/xxxxxCB-...)

ATEX encoders with CANopen interface are based on the Hx58 FB series encoders, thus refer to the transmission specifications described in the Hx58 FB CANopen manual; differences, if any, are described below. Furthermore they need the **Lika_HSxCB_DS406_Vx.eds** (singleturn) or **Lika_HMxCB_DS406_Vx.eds** (multiturn) EDS file. User's manual and EDS file are available at the address: **www.lika.biz > PRODUCTS > ROTARY ENCODERS > ABSOLUTE ENCODERS > CAN > Hx58 FB**).

Function	Wires
+10Vdc +30Vdc Supply voltage	Red
0Vdc Supply voltage	White
CAN L (bus input)	Blue
CAN H (bus input)	White
CAN L (bus output)	Green
CAN H (bus output)	White
Not used	Yellow
Not used	White
CAN Shielding	Shield

WARNING

- The node address and the baud rate must be set via software by the bus Master (see objects 3000h e 3001h in the "Object dictionary" section of the enclosed Hx58 FB CANopen manual). Node address = 1 and baud rate = 500 Kbit/s are set by Lika Electronic by default; to set a different address you must connect to the network one encoder at a time and then set the node ID, otherwise an address conflict will occur. With /AABT order code (see datasheet), AA address (except AA = 7Eh) and B baud rate (except B = Z) cannot be modified.
- Do not open the device for any setting!
- The diagnostic LEDs are not available for this model.
- Provided cable is not a CANopen certified cable, anyway it is fitted with bus input and output to avoid installing stubs on the CANopen network.
- If the encoder is either the first or the last in the transmission line (at the ends of the network), the bus termination resistor must be provided outside the device (120Ω bus termination resistor between CAN High and CAN Low outputs) as shown in the scheme. With /AABT order code (see datasheet), if T = 1, the termination resistor is installed and active and cannot be deactivated (do not install external resistors!).

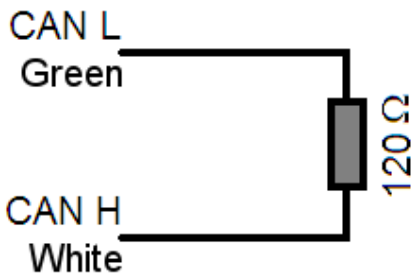

- To avoid irreparable damages to the encoder wires which are not used must be cut at different lengths and insulated singularly.

6.7 XAC77 with DeviceNet interface (XAC77xx/xxxxxFD-...)

ATEX encoders with DeviceNet interface are based on the Hx58 FB series encoders, changes are described below; refer to the transmission specifications described in the Hx58 FB DeviceNet manual; differences, if any, are described below. Furthermore they need the **Lika_HS58x_FDV_Vx.eds** (singleturn) or **Lika_HM58x_FDV_Vx.eds** (multiturn) EDS file. User's manual and EDS file are available at the address: **www.lika.biz > PRODUCTS > ROTARY ENCODERS > ABSOLUTE ENCODERS > DEVICENET > Hx58 FB**).

Function	Wires
+10Vdc +30Vdc Supply voltage	Red
0Vdc Supply voltage	White
CAN L (bus input)	Blue
CAN H (bus input)	White
CAN L (bus output)	Green
CAN H (bus output)	White
Not used	Yellow
Not used	White
CAN Shielding	Shield

WARNING

- Do not open the device for any setting!
- The diagnostic LEDs are not available for this model.
- Provided cable is not a CANopen certified cable, anyway it is fitted with bus input and output to avoid installing stubs on the CANopen network.
- To avoid irreparable damages to the encoder wires which are not used must be cut at different lengths and insulated singularly.
- The node address (00hex ... 3Fhex) is pre-set at Lika premises according to the order code shown in the table ⓐ below; value is expressed in hex.
- The baud rate is pre-set at Lika according to the order code shown in the table ⓐ below.
- The bus termination resistor (necessary if the encoder is either the first or the last in the transmission line, i.e. at the ends of the network) is pre-set at Lika premises according to the order code shown in the table ⓐ below.
- As an alternative the termination resistor can be provided outside the device (120Ω resistor between CAN High and CAN Low outputs) as shown in the following scheme ⓑ:

ⓐ

XAC77xx/xxxxx**FD**-xx-xxx/**aabt**	
aa: node address (hex)	00hex ... 3Fhex (00 ... 63)
b: baud rate	D = 125 kbit/s E = 250 kbit/s F = 500 kbit/s
t: termination resistor	0 = deactivated 1 = activated
EXAMPLE: XAC77xx/xxxxx**FD**-xx-xxx/**0DD0** 0D= node address 0Dhex (13dec); D = baud rate 125 kbit/s 0 = termination resistor deactivated	

ⓑ

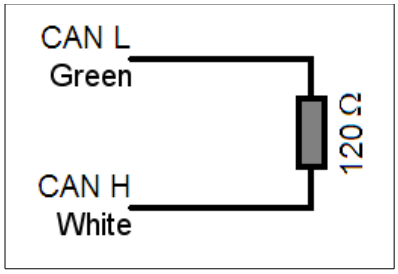

6.8 XAC77 with analogue output

ATEX encoders with analogue output are based on the EM58 PA series programmable encoders, thus refer to the transmission specifications described in the enclosed EM58 PA manual; differences, if any, are described below. Furthermore they need the programming interface tool for configuration. User's manual and programming file are available at the address: **www.lika.biz > PRODUCTS > ROTARY ENCODERS > ABSOLUTE ENCODERS > ANALOGUE OUTPUT > EM58 PA**).

Function	T12 cable
TxD (RS232) *	Red
RxD (RS232) *	Green
0Vdc (RS232)	Brown
Fault	Yellow
+Iout	Gray
0Vdc Analog	Violet
+Vout	Pink
Counting Direction	Blue
Preset (Zero setting)	White
+13Vdc +30Vdc	Brown/Green
0Vdc power supply	White/Green
Shielding	Shield

***** Make sure that RxD on PC side is connected with TxD on device side and TxD / PC is connected with RxD / device

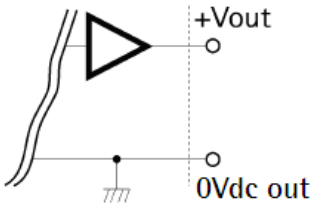

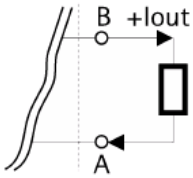

Description

- "**0Vdc Analog**" signal is internally connected to 0Vdc.
- **Preset:** Data latch in memory (active high for at least 100 ms).
- **Counting Direction:** set counter clockwise (active high).
- **Fault:** Open collector signal for cable integrity check (only current output).
  To connect fault signal refer to Figure 2 and Figure 3, pay attention to the value of R2.
  No enc. error = transistor ON (in conduction).
  Encoder error = transistor OFF (open).

Fault connected to a PLC input	Fault connected to a relay
$R2 = \left(\frac{Vdc}{I}\right) - R1$ 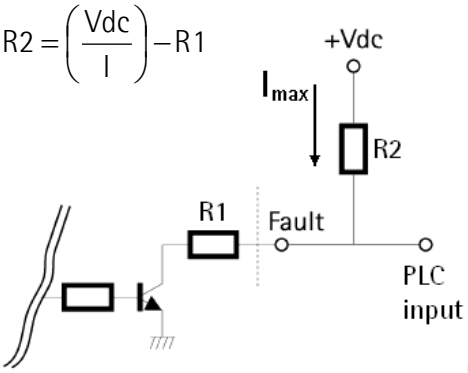 Fig. 2 **Example** 1KΩ < R2 < 10KΩ No encoder error = PLC input Low (0 Vdc). Encoder error = PLC input High (+Vdc).	Imax = 50mA R1 = 47Ω 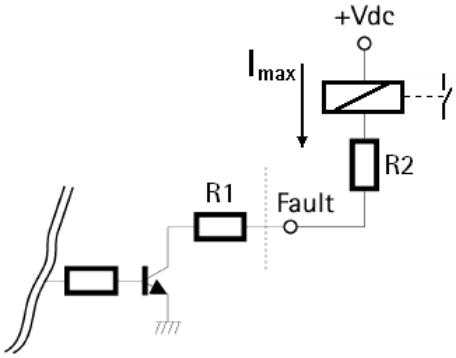 Fig. 3 **Example** Vdc = +24V I = 30mA (current necessary to energize the coil of a small relay) R2 = 750Ω No encoder error = coil energized. Encoder error = coil not energized.

6.9 XAC77 with integrated cam switch programmer (XAC7712/256CS-14-...)

ATEX encoders with integrated cam switch programmer are based on the AMR58/AMRC series encoders; differences, if any, are described below. For any information on the the communication characteristics and programming the encoder please refer to the documentation of the AMR58 series encoder at the address: **www.lika.biz > PRODUCTS > ROTARY ENCODERS > ABSOLUTE ENCODERS > AMR58**).

Function	A32 cable
OUT 1	Brown
OUT 2	Red
OUT 3	Pink
OUT 4	Yellow
OUT 5	Green
OUT 6	Blue
OUT 7	Violet
OUT 8	Grey
Data OUT +	Blue/Red
Data OUT -	Pink/Grey
Clock IN +	White/Yellow
Clock IN -	Brown/Green
Load Program	White/Green
Select Program 2^0 (1)	Yellow/Brown
Select Program 2^1 (1)	White/Blue
Select Program 2^2 (1)	Brown/Blue
Select Program 2^3 (1)	White/Pink
Fault	White/Grey
RxD RS-232 (2)	Pink/Brown
TxD RS-232 (2)	Grey/Brown
0Vdc (3)	Brown/Black
0Vdc RS-232 (4)	White/Black
Zero setting	Grey/Green
Counting Direction	Yellow/Pink
+10Vdc +30Vdc Power supply	Green/Blue + Pink/Green
0Vdc Power supply (3)	Yellow/Blue + Yellow/Grey
Shielding	Shield

NOTE

1. Program selection inputs (Select Program) are internally connected to 0Vdc through pull-down resistors. They are active at +Vdc.
2. Please always make sure that the RxD of the ENCODER is cross-wired to the TxD of the PC while the TxD is cross-wired to the RxD.
3. 0Vdc and 0Vdc Power supply are internally connected.
4. 0Vdc RS-232 is internally insulated from 0Vdc Power supply.

7 – Mechanical characteristics

7.1 XC77 incremental encoder

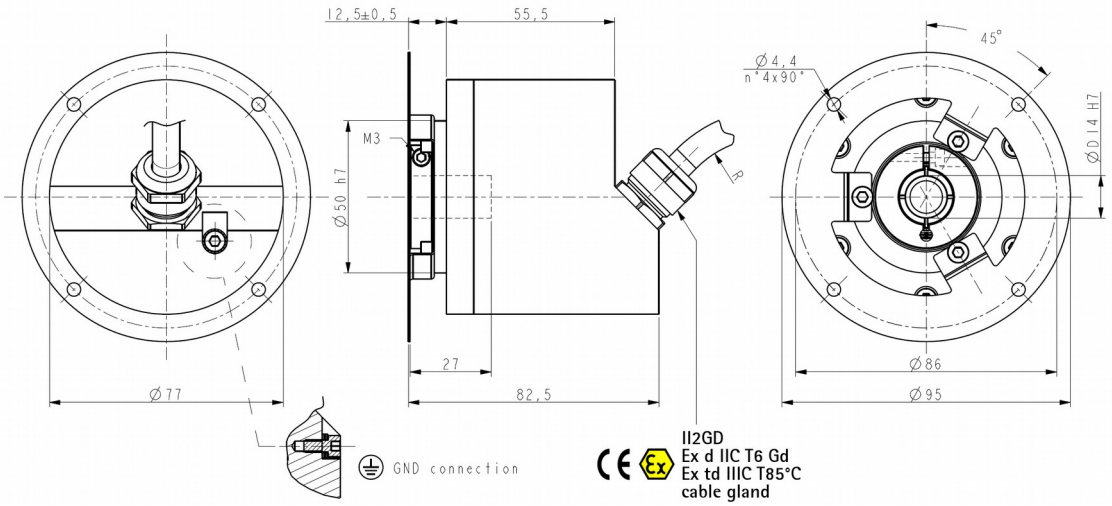

7.2 XAC77 absolute encoder

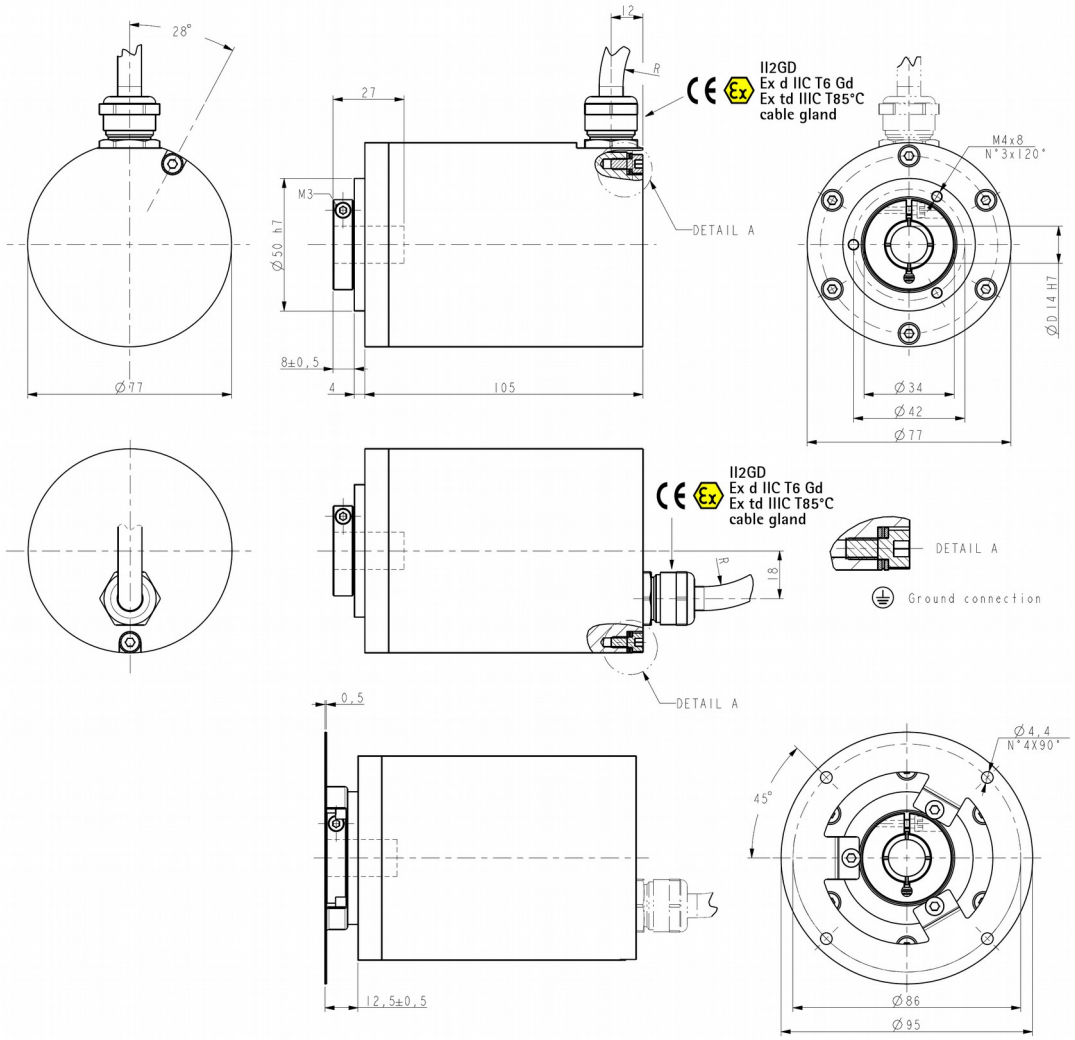

7.3 Solid shaft (LKM-1758) and Fixing plate (LKM-1520)

LKM-1758 is an optional feature thus it has to be ordered separately.

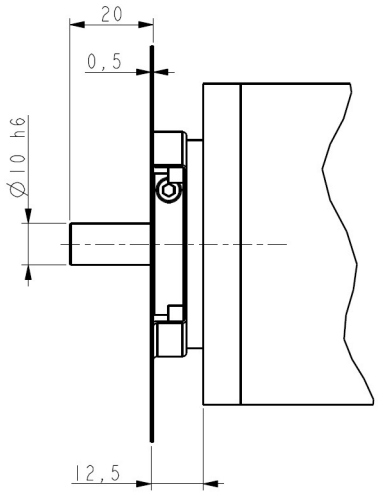

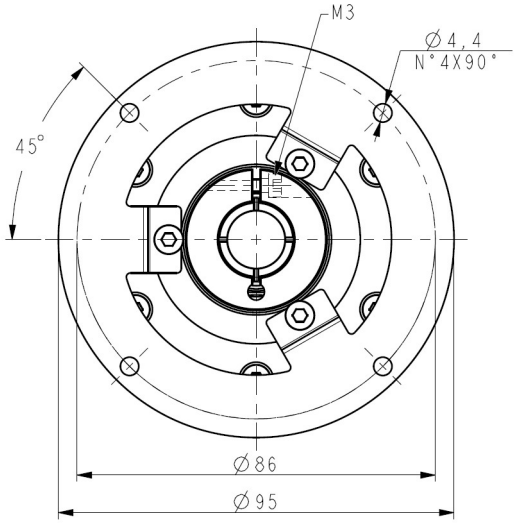

WARNING
Unit with solid shaft: in order to guarantee maximum reliability over time of the mechanical parts, we recommend a flexible coupling to be installed to connect the encoder and the installation shaft; make sure the misalignment tolerances of the flexible coupling are respected.

7.4 Mounting instructions

WARNING
Installation and maintenance operations have to be carried out by qualified personnel only, with power supply disconnected and mechanical parts absolutely in stop.

- Fasten the fixing plate **1** to the encoder using the three M4 screws **2** provided with the device;
- mount the encoder on the motor shaft using the reducing sleeve (if supplied); avoid forcing the encoder shaft;
- fasten the fixing plate **1** to the rear of the motor using four M4 cylindrical head screws **3**;
- fix the collar **4** to the encoder shaft.

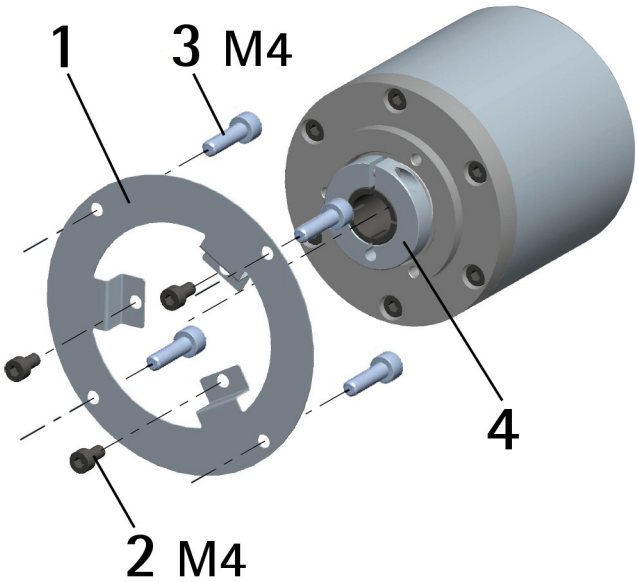

This page intentionally left blank

Document release	Description
1.0	1st issue
1.1	Adding section 7.6
1.2	Adding sections 7.7 and 7.8
1.4	Updating section 7
1.5	Updating section 7.4
1.6	Updating section 7.6
1.7	Updating section 7.6
1.8	Updating sections 7.4 and 7.5
2.0	Updating sections 7.4, 7.5 and 7.6
2.1	Added information on cam switch encoder (6.9 XAC77 with integrated cam switch programmer (XAC7712/256CS-14-...)" section)
2.2	Web links updated
2.3	"6.5.1 Setting the node address via BUS (SAP55 service)" section updated
2.4	Analogue encoder information and mounting instructions updated
2.5	ATEX certificates update
2.6	Information about cable length added ("6.1 Minimum cable length")
2.7	DeviceNet interface version added
2.8	ATEX certificates update
2.9	ATEX certificates update
2.10	Declaration of CE Conformity update
2.11	"Product Quality Assurance notification CESI 16 ATEX 005 Q" added
2.12	New ATEX directive 2014/34/EU and electromagnetic compatibility 2014/30/EU, EU Declaration of Conformity update
2.13	EU Declaration of Conformity and mechanical drawings updated

Dispose separately

Lika Electronic
Via S. Lorenzo, 25 - 36010 Carrè (VI) - Italy

Tel. +39 0445 806600
Fax +39 0445 806699

Italy: eMail info@lika.it - www.lika.it
World: eMail info@lika.biz - www.lika.biz